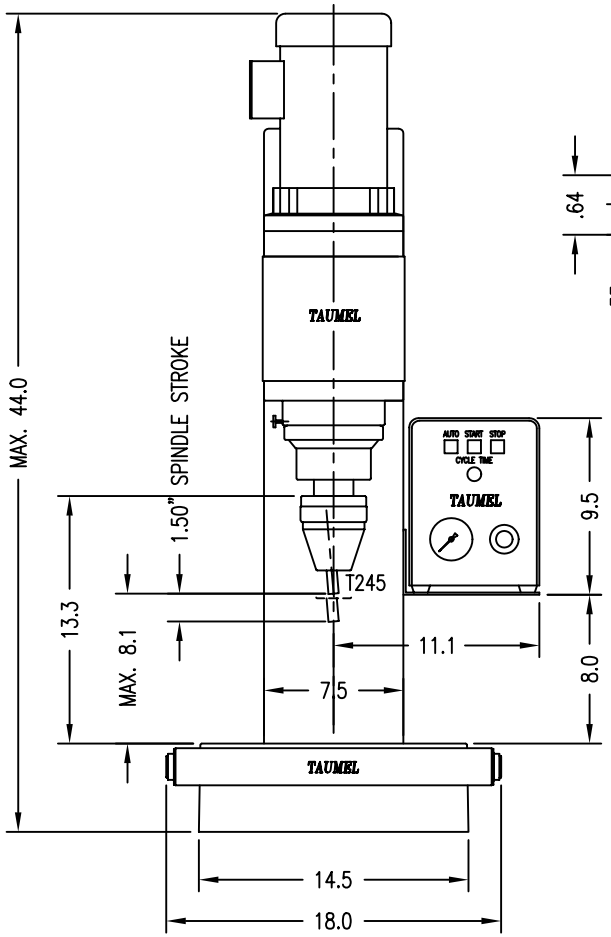

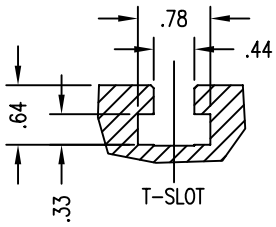

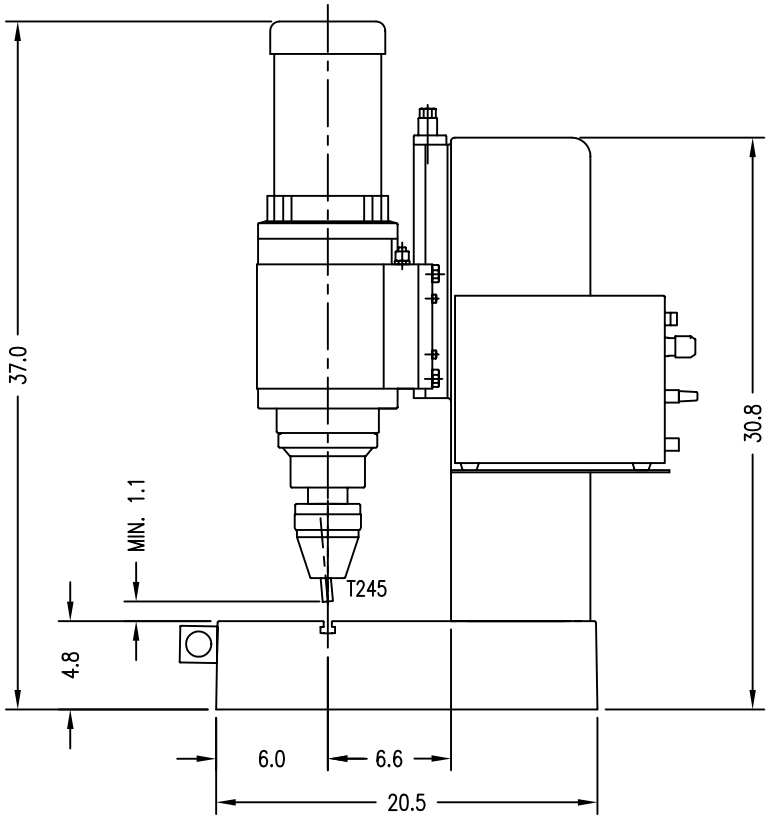

CONFIDENTIAL–PROPERTY OF TAUMEL ASSEMBLY SYSTEMS PATTERSON NEW YORK

TITLE: T501 ORBITAL HEADFORMING MACHINE	DRAWN	TAUMEL
	DATE	12–12–95
	SCALE	1:7
TAUMEL — TAUMEL ASSEMBLY SYSTEMS PATTERSON, NEW YORK	DWG. NO.	T70–420B